PRODUCT SHEET

MONARCH 6337C

63" X 37" X 20"

THERMOMASSEUR® BATH	$
TUB	$

THERMOMASSEUR (TMU)	
Jets	40
1 heated backrest	included
MiaPlus® Control (uninstalled)	included
Geysair®	included
AromaCloud®	N/A
Chromatherapy – 2 LED	$

TUB no therapy	
Chromatherapy – 2 LED	$
WarmTouchShell®	$
DOT control	included with therapy

FEATURES			
Installation			Drop-in
No. of bathers		Imp. gallons	40
US gallons	48	Integrated waste & overflow	inst. & incl.

INTEGRATED WASTE & OVERFLOW	
Chrome, White	
Brass, Brushed Nickel, Polished Nickel	

FEATURES (INCLUDED)	
COLOR (INNER SHELL)	**DECK COLOR**
Standard White	**Standard** Grey Expo, Noka, Jet Black, Lagos Blue

OPTIONAL UPCHARGE APPLICABLE	
FINISH (INNER SHELL)	
UltraVelour Matte Finish (White Only)	$
DECK COLOR	
Optional Quasar Light, Piatra Grey, Emperado, Tuscan Dawn, Statuario Maximus	$
CONTROL (TMU ONLY)	
MiaMulti® (uninstalled)	$
WASTE & OVERFLOW	
Chrome	$
White	$
Brass	$
Brushed nickel, Polished nickel & Oil-rubbed bronze	$

DON'T FORGET THAT THIS MODEL IS AVAILABLE IN **WHITE ONLY WITH CHOICE OF DECK COLOR**.
DON'T FORGET TO SPECIFY **THE FINISH OF THE INTEGRATED WASTE & OVERFLOW.**

1 800 463.2187
info@bainultra.com

From 8 a.m. to 8 p.m. Monday to Thursday (EST)
From 8 a.m. to 5 p.m. on Friday (EST)

BainUltra®
The quest for your wellness®
www.bainultra.com

MONARCH 6337C 63″ X 37″ X 20″

ACCESSORIES (OPTIONAL)

OTHER	Control cannot be installed on the quartz deck.

TOTAL PRICE	$

DROP-IN INSTALLATION

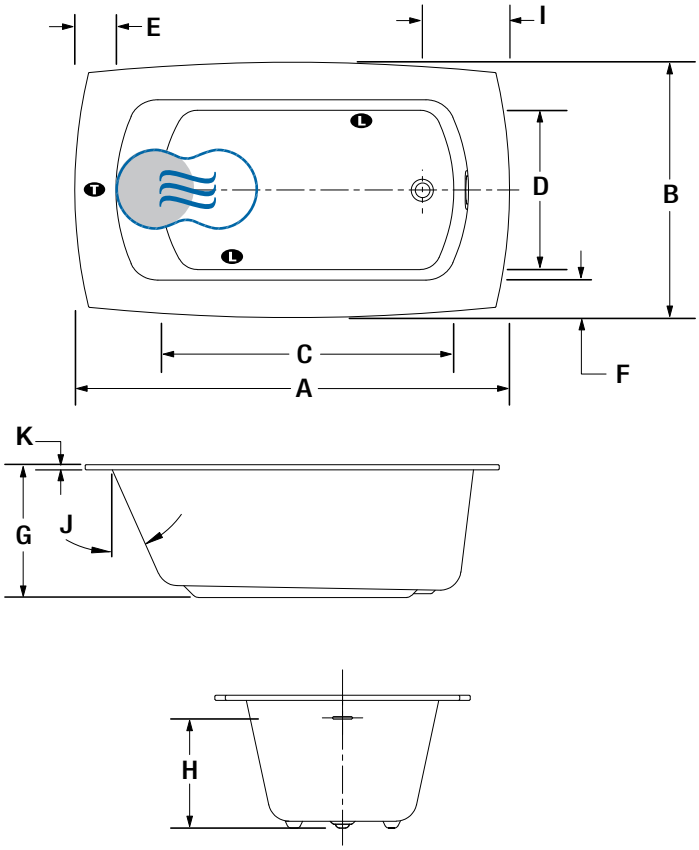

LETTER	DESCRIPTION	MEASURE
A	Total length	63″
B	Total width	37″
C	Bathing well length (at height of jets)	42 3/8″
D	Bathing well width (at height of jets)	22 3/4″
E	Deck width (backrest)	6 1/8″
F	Deck width (sides)	5 5/8″
G	Tub height	19 7/8″
H	Height from waste to center of overflow	15 3/8″
I	Outside edge to center waste	11 1/8″
J	Slope of backrest	24°
K	Quartz deck height	3/4″

T Indicates turbine position (TMU)
L Indicates LED light position
Indicates WarmTouchShell position (TUB)
Indicates heated backrest (TMU)

TECHNICAL SPECIFICATIONS

Hot water supply required	Should be 70% of water capacity of tub or greater.
Turbine	Access to the pump must be at least 18″ X 22″. **Standard connection is 20 A. 120 V, 60 hz**, dedicated line with a Ground-Fault Circuit Interrupter (GFCI). **For any additional option, a second line is needed 15 A. 120 V, 60 hz**, dedicated line with a GFCI.

Our products must be installed by certified professionals only and according to our Owner's Manual as well as federal, provincial/state and local building codes and regulations (www.bainultra.com/documentation/documentation).

Approx. shipping weight	248 lbs
Turbine power	600 W
Air heater	600 W

WARRANTY

Controls-LED-Geysair*	5 years
Quartz Deck*	15 years
Bath & turbine*	20 years

*Some restrictions apply | www.bainultra.com/warranty

The specifications shown indicate the outer edge dimension and the inside bathing capacity dimension measured at air jets' height. The manufacturer accepts a 1/4″ [0.64 cm] variance. There are variations on each product and specifications are subject to change as we improve upon our product as required. The dimensions needed for site preparation and structure building will differ. BainUltra® assumes no responsibility for preparatory work done prior to the product being on site.

Copyright © March 2017 | BainUltra Inc. All rights reserved.